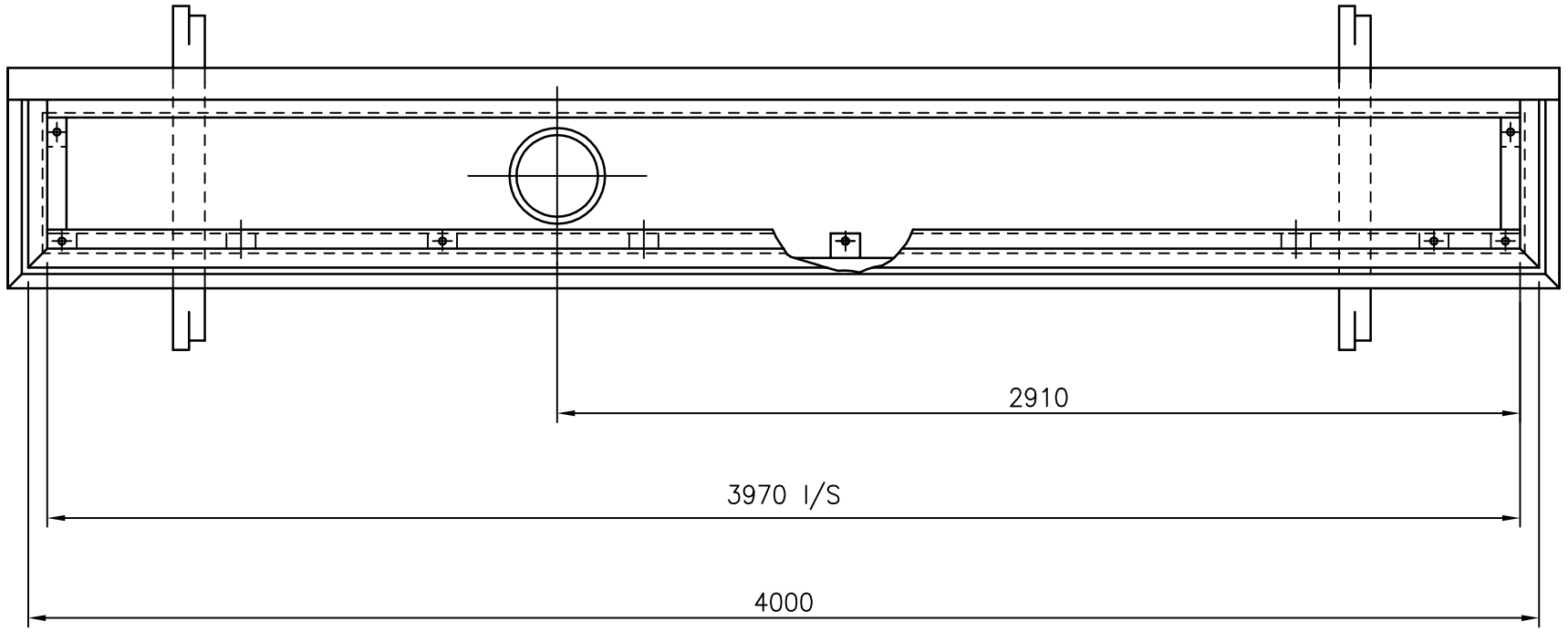

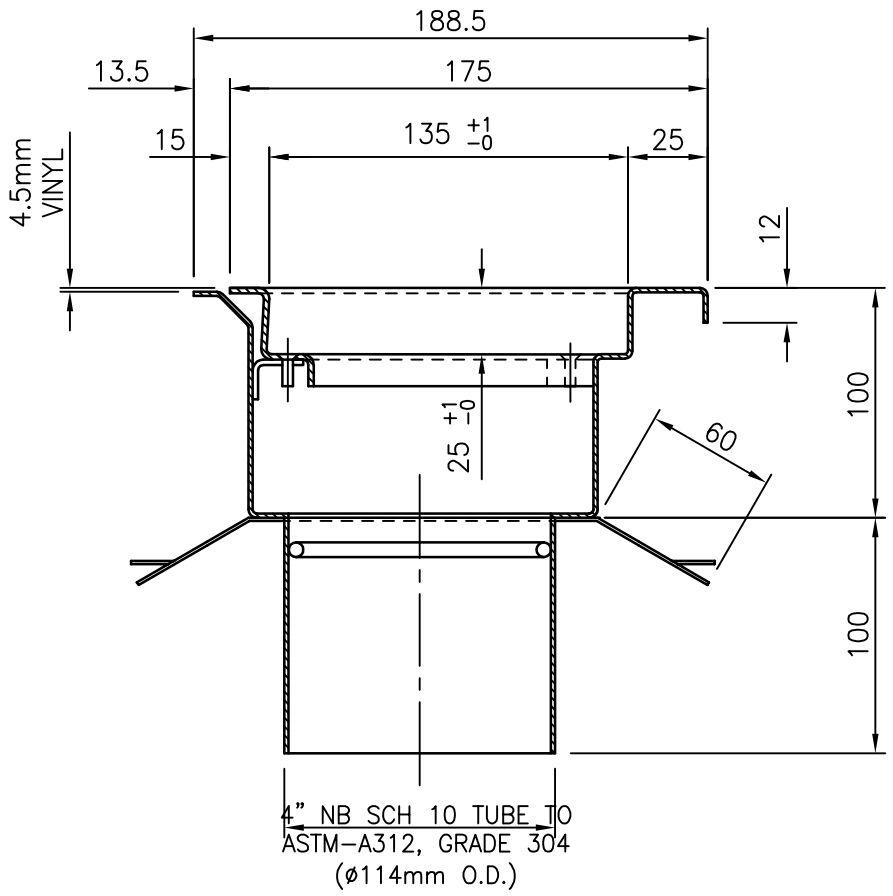

SECTION THRO' OUTLET

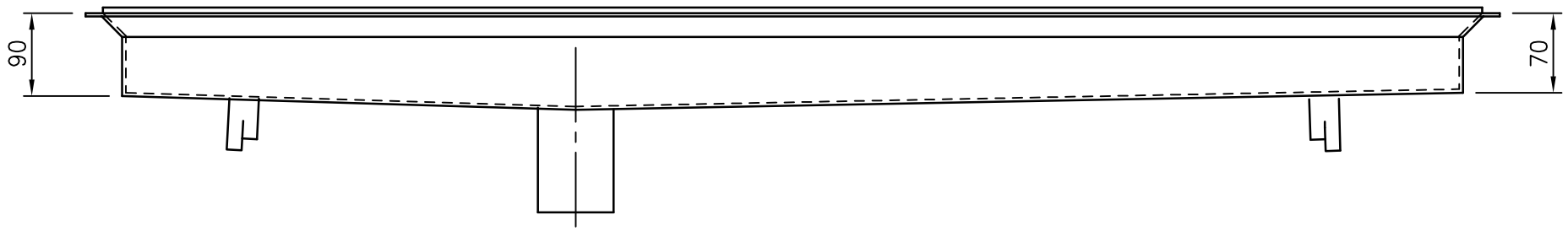

DO NOT SCALE THIRD ANGLE PROJECTION IF IN DOUBT ASK !

©2009

ISS. No.		DRAWN			TITLE
C.N. No.		CHECKED			STAINLESS STEEL RE/SVF CHANNEL WITH BUILT−IN FALL
DATE		APPROVED			

WADE

WADE INTERNATIONAL LTD.
THIRD AVENUE, HALSTEAD, ESSEX, CO9 2SX.
Tel: +44 (0)1787 475151 Fax: +44 (0)1787 475579
e−mail: tech@wadedrainage.co.uk web site: http://www.wadedrainage.co.uk

MATERIAL
STAINLESS STEEL SHEET GRADE 304 TO BS1449 PT.2, 16 SWG UNLESS OTHERWISE STATED.

SCALE	DRG. No.	ISS. No.
NTS	55388751	1